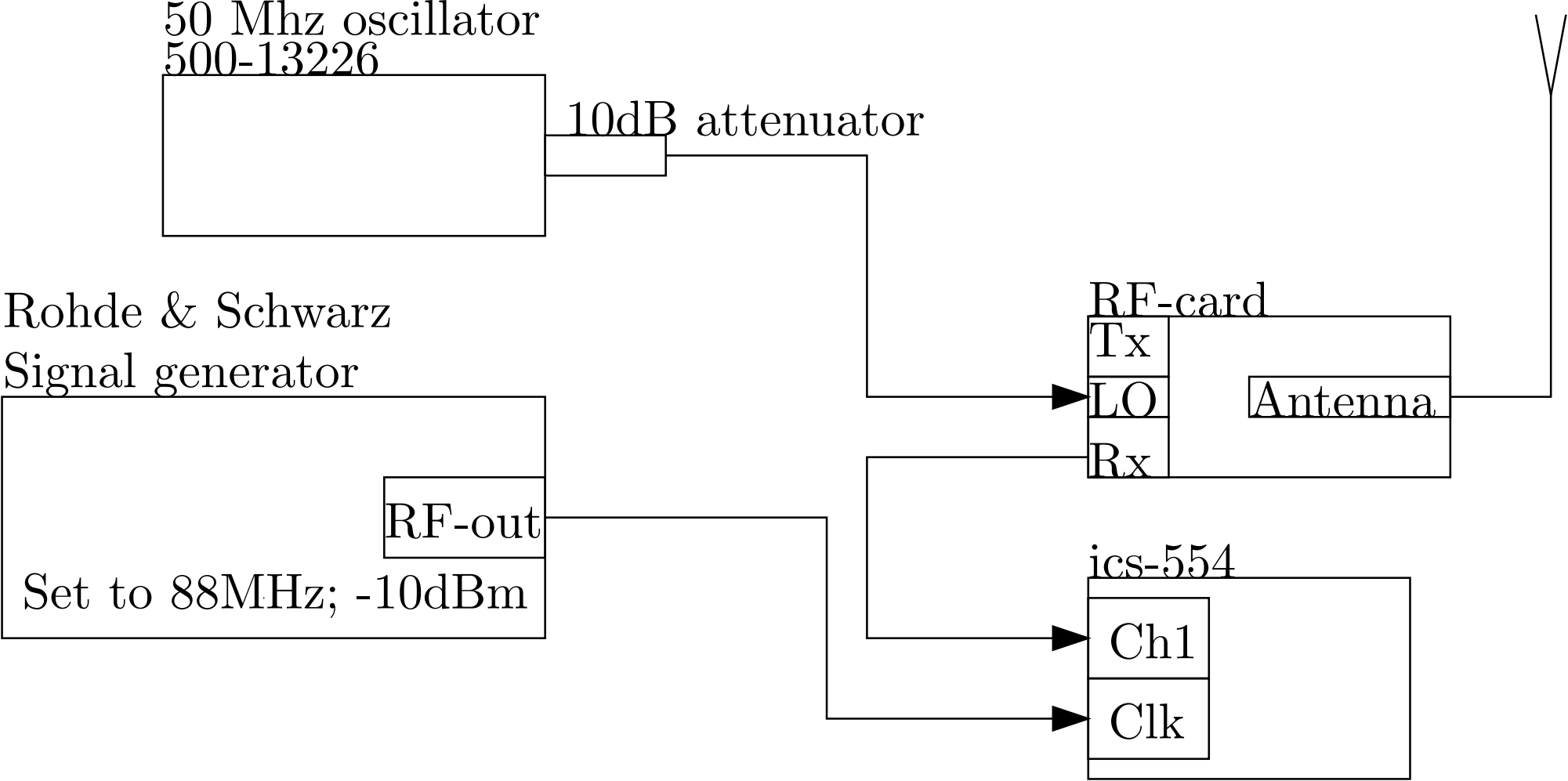
50 Mhz oscillator
500-13226
10dB attenuator
Rohde & Schwarz
Signal generator
RF-out
Set to 88MHz; -10dBm
RF-card
Tx
LO
Rx
Antenna
ics-554
Ch1
Clk