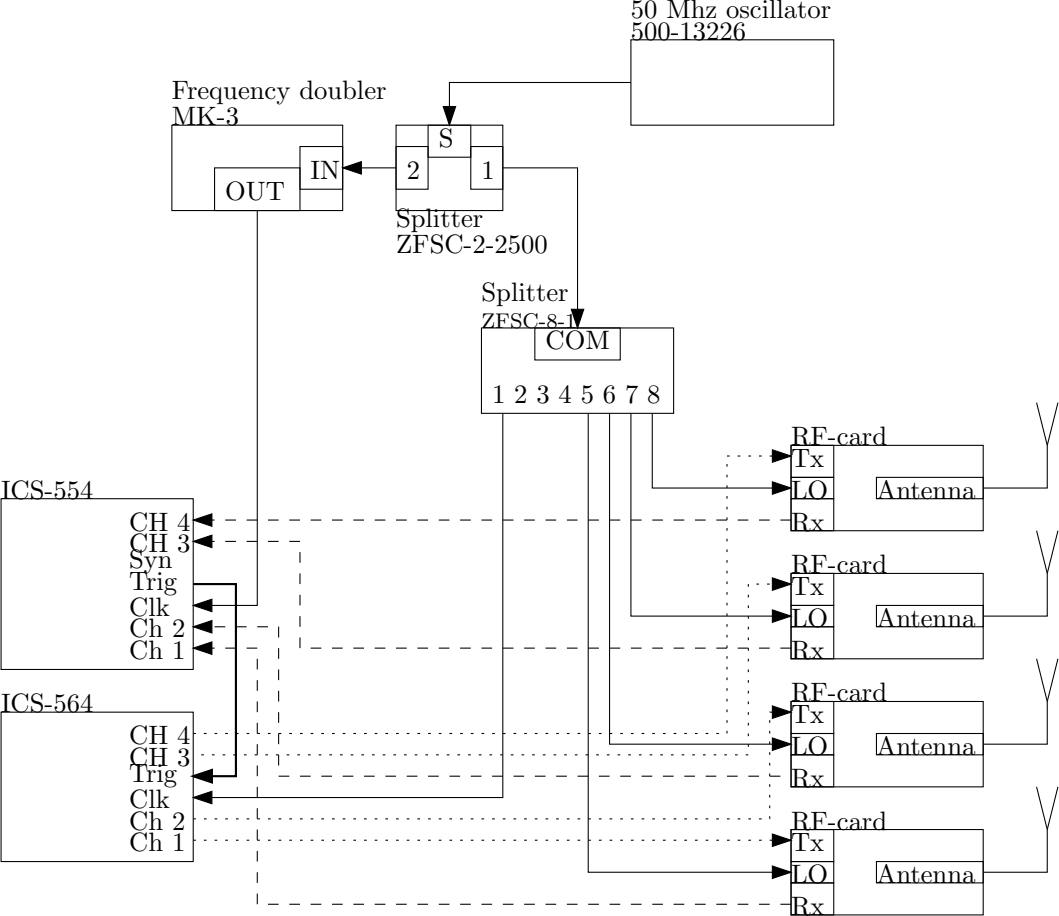
50 Mhz oscillator
500-13226
Frequency doubler
MK-3
IN
OUT
S
2
1
Splitter
ZFSC-2-2500
Splitter
ZFSC-8-1
COM
1 2 3 4 5 6 7 8
RF-card
Tx
LO
Rx
Antenna
ICS-554
CH 4
CH 3
Syn
Trig
Clk
Ch 2
Ch 1
ICS-564
CH 4
CH 3
Trig
Clk
Ch 2
Ch 1